Introduction to Lab Equipment

Introduction to Lab Equipment

- **Lab objectives**
  - Gain familiarity with key lab equipment
  - Set up and analyze simple electronic circuits using basic equipment
- **Key lab equipment includes**
  - Breadboards and associated BNC cables and connectors
  - Keithley 2430 Source Measure Unit (SMU)
  - Keysight DSOX1102A Oscillocope
  - Agilent 33220A Function Generator

Introduction to Lab Equipment

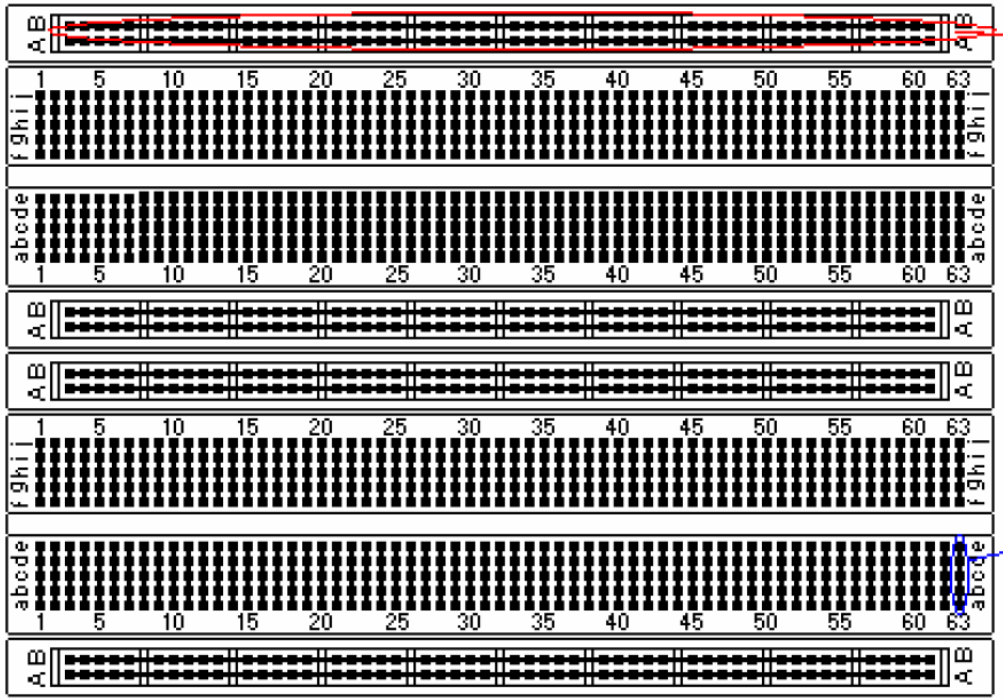

This is an example of a Bus. A Bus is often used as way of delivering a common voltage to the entire system, in this case the bread board. You may use a bus to make a common ground for the circuits you will build in this class.

This is a connection strip.

Breadboard schematic showing buses and connection strips.

Introduction to Lab Equipment

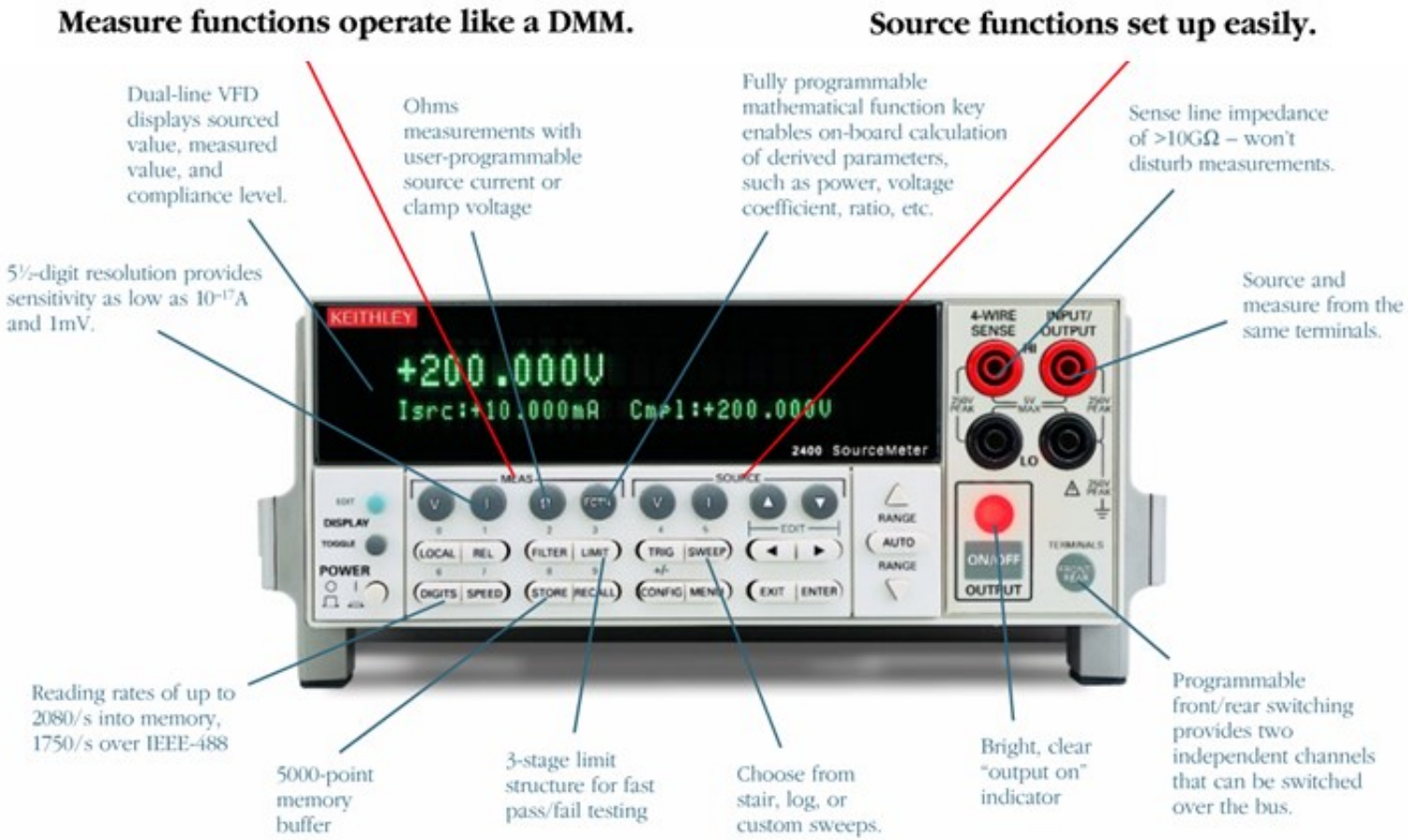

Keithley 2400 Source Measure Unit (SMU)

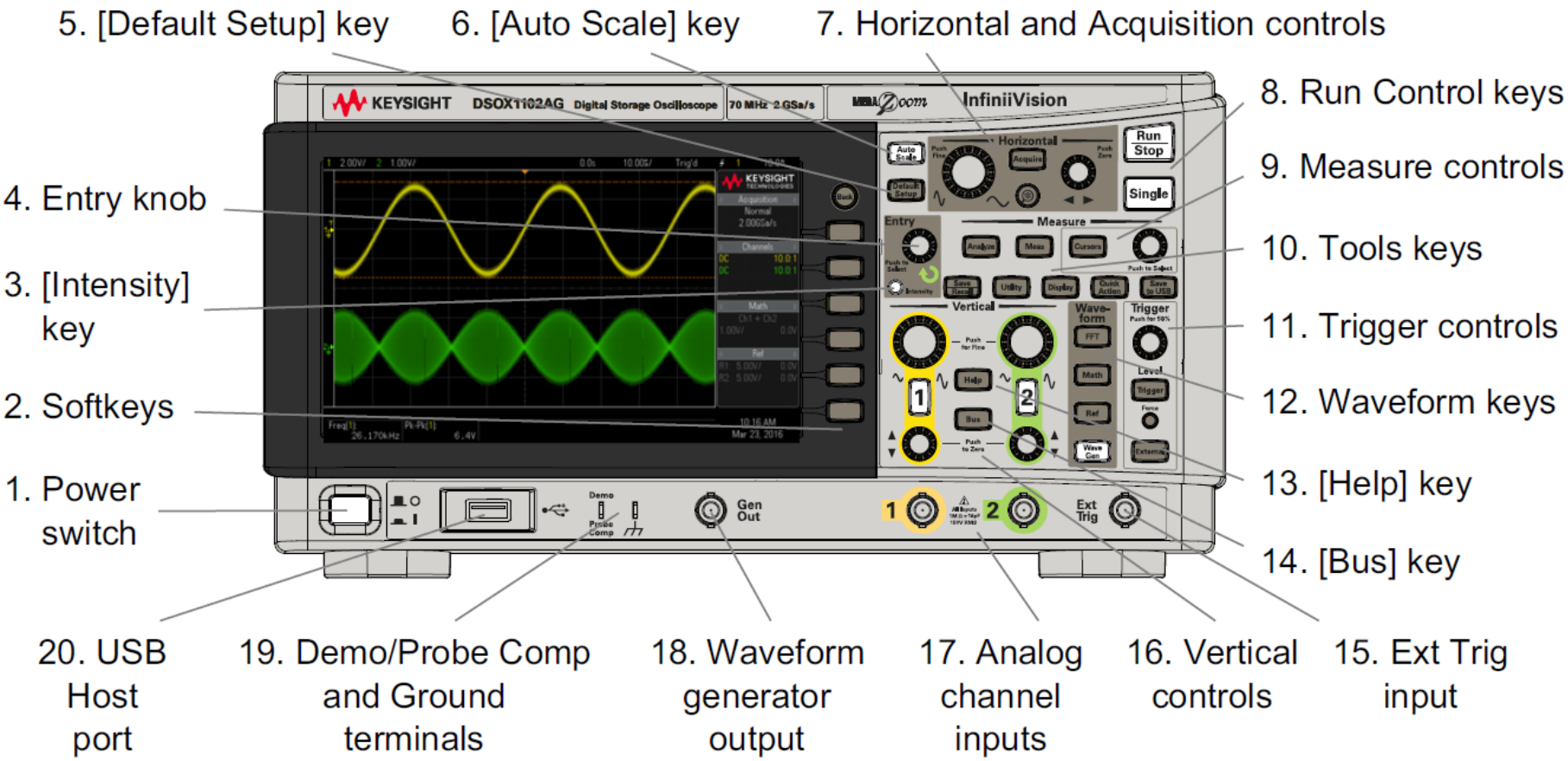

Keysight DSOX1102A Oscilloscope

The Front Panel at a Glance

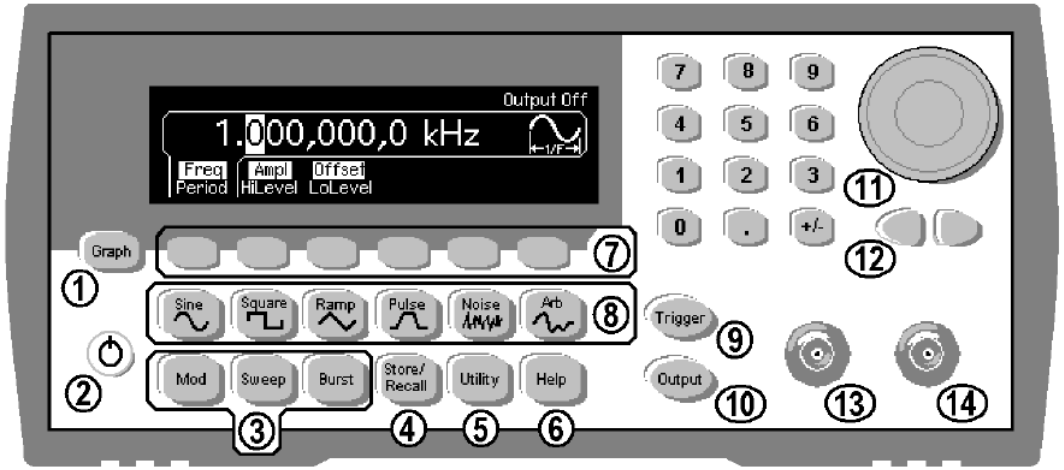

1 Graph Mode/Local Key
2 On/Off Switch
3 Modulation/Sweep/Burst Keys
4 State Storage Menu Key
5 Utility Menu Key
6 Help Menu Key
7 Menu Operation Softkeys
8 Waveform Selection Keys
9 Manual Trigger Key (*used for Sweep and Burst only*)
10 Output Enable/Disable Key
11 Knob
12 Cursor Keys
13 Sync Connector
14 Output Connector

Agilent 33220A Function Generator

Introduction to Lab Equipment

- **Function generator and oscilloscope measurements**
  - **Build simple series circuit**
  - **Force a frequency of 100 Hz and a peak-to-peak amplitude of 5 V with the function generator**
  - **Measure voltage and frequency across R1 with oscilloscope by using Channels 1 and 2 and positioning one side of each probe on each side of R1 and the other side to ground**

Test circuit for Section 5.1

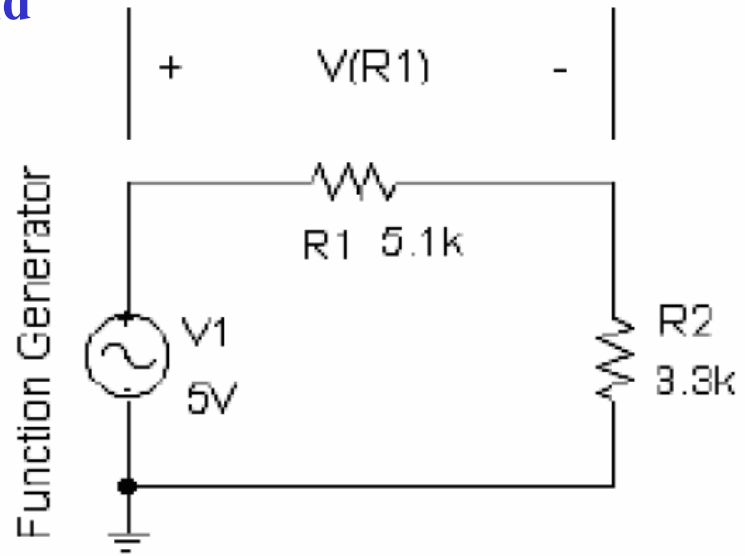

- **Keithley SMU measurements**
  - Build simple series and parallel circuits shown below
  - Force 10 V DC with first Keithley through circuit on left in (a)
    - Measure voltages in R1 and R2 with second Keithley
    - Measure current in circuit from Keithley used as voltage source
  - Force 5 mA DC with first Keithley through circuit on right in (b)
    - Measure currents in R3 and R4 with second Keithley
  - Measure the impedance of the two resistors with the Keithley SMU by pressing Ω under Measure and then Auto Range for use in calculations

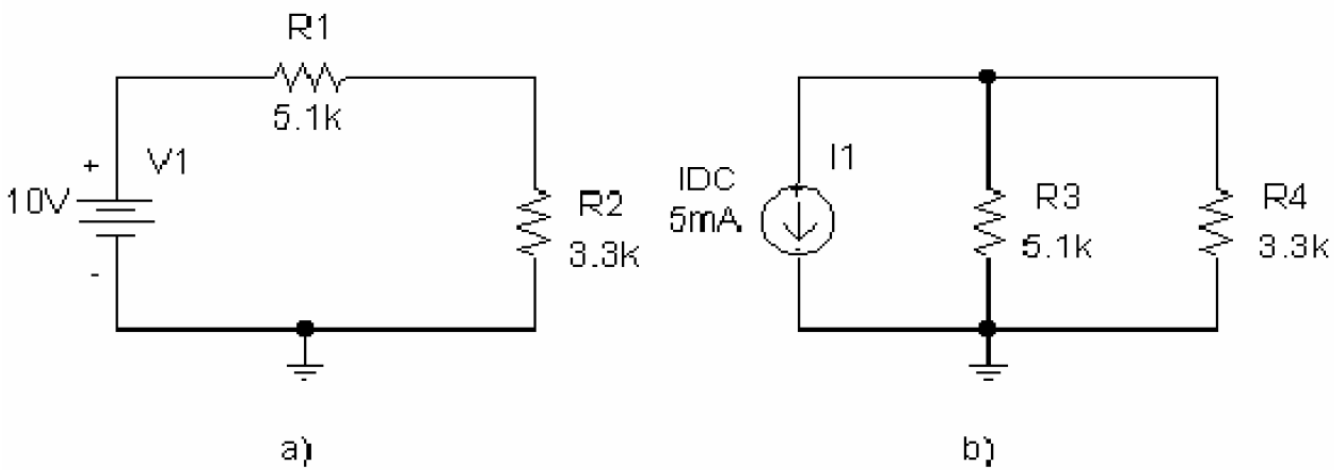

Test circuits for Section 5.2